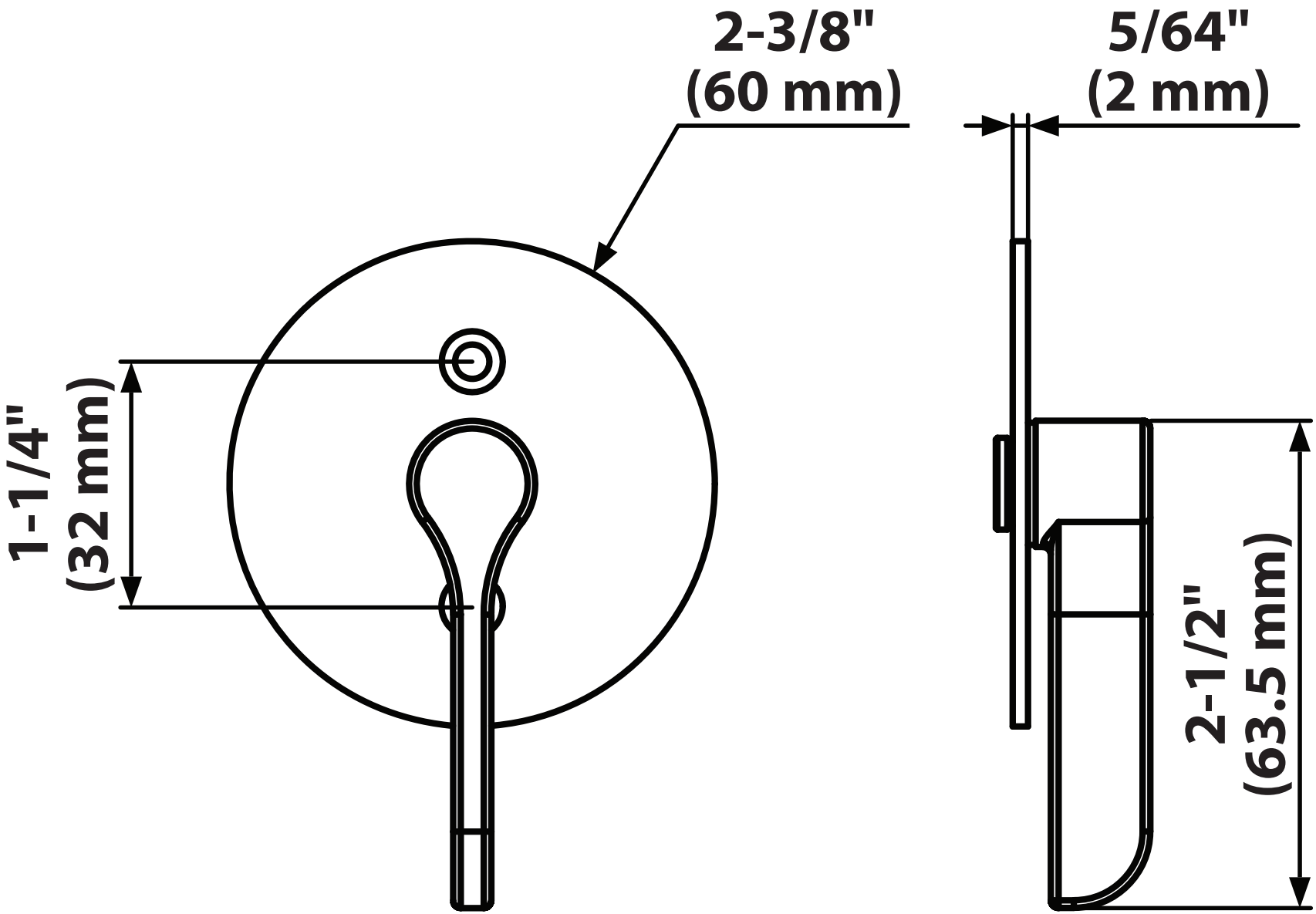
2-3/8"
(60 mm)
5/64"
(2 mm)
1-1/4"
(32 mm)
2-1/2"
(63.5 mm)