OKEY DOKEY 6510411A140 & 6510411B140
Technical Drawing - Frame only

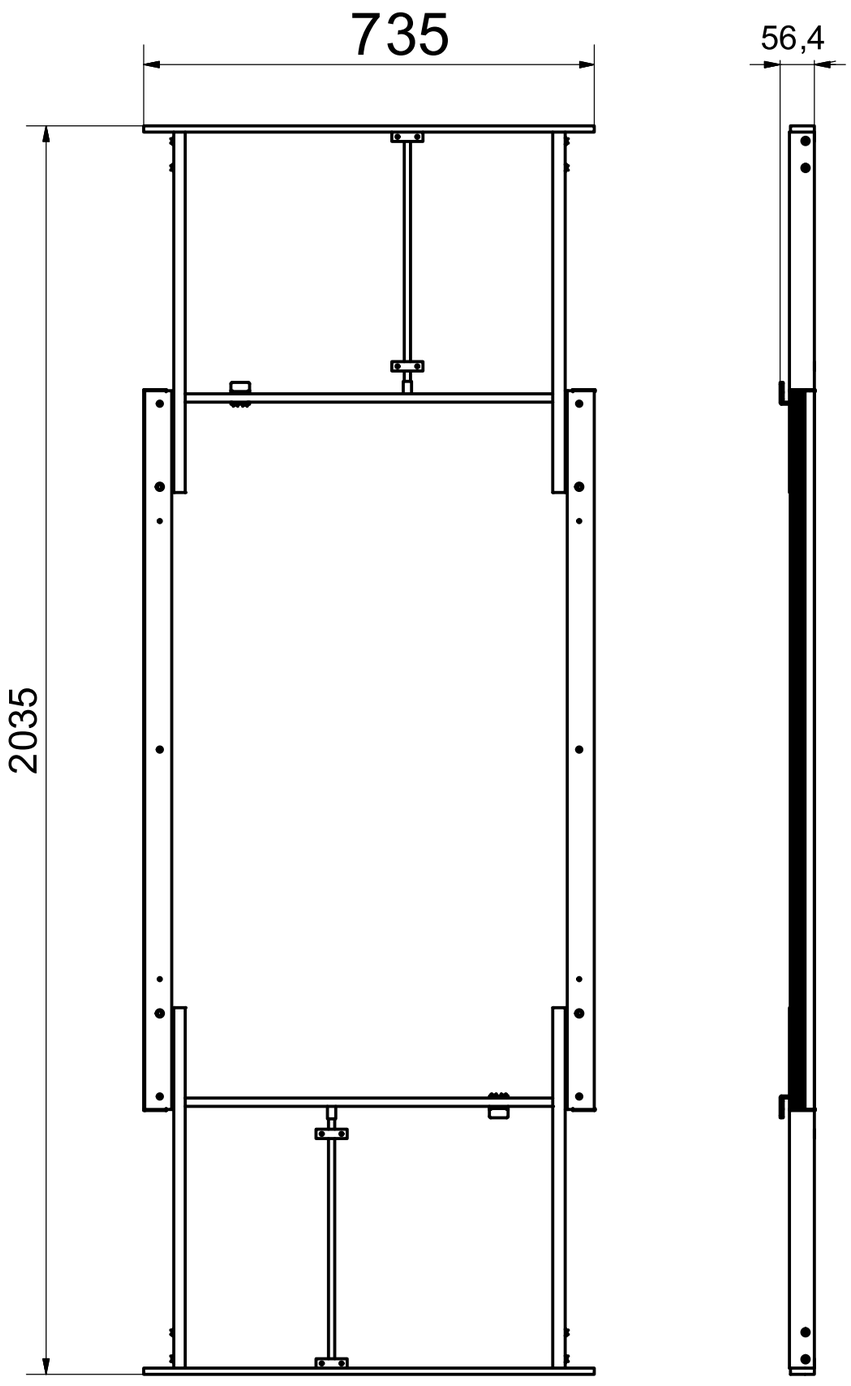

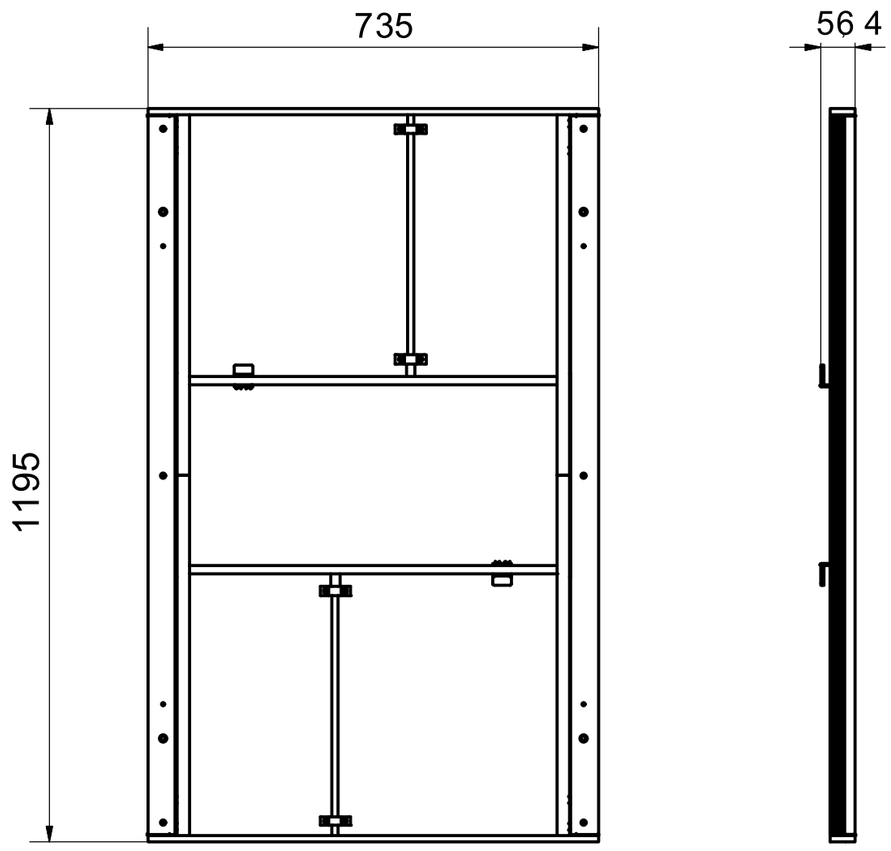

OKEY DOKEY 6510411A140 & 6510411B140
Technical Drawing

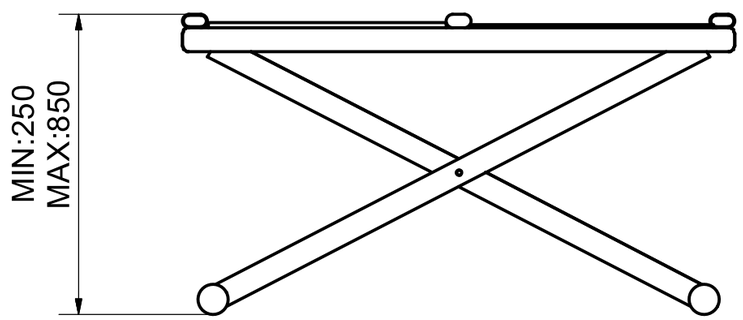

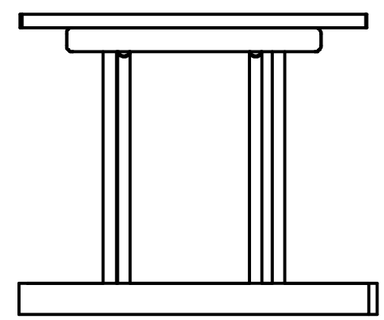

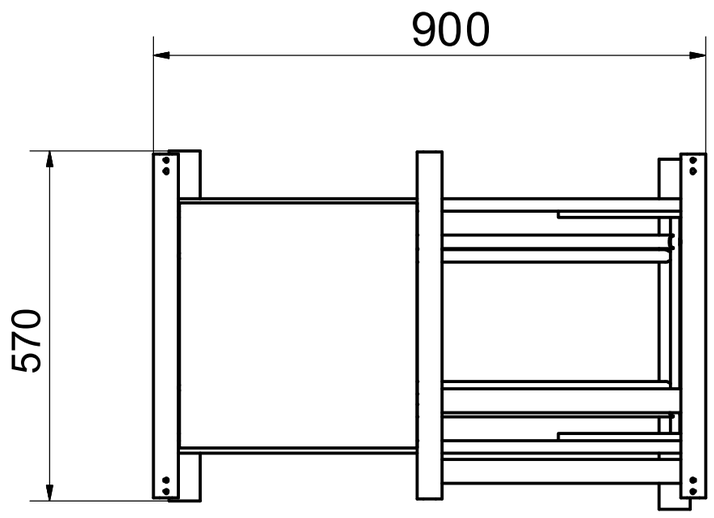

OKEY DOKEY 6510411A140 & 6510411B140
Technical Drawing - With Top Panel

OPEN

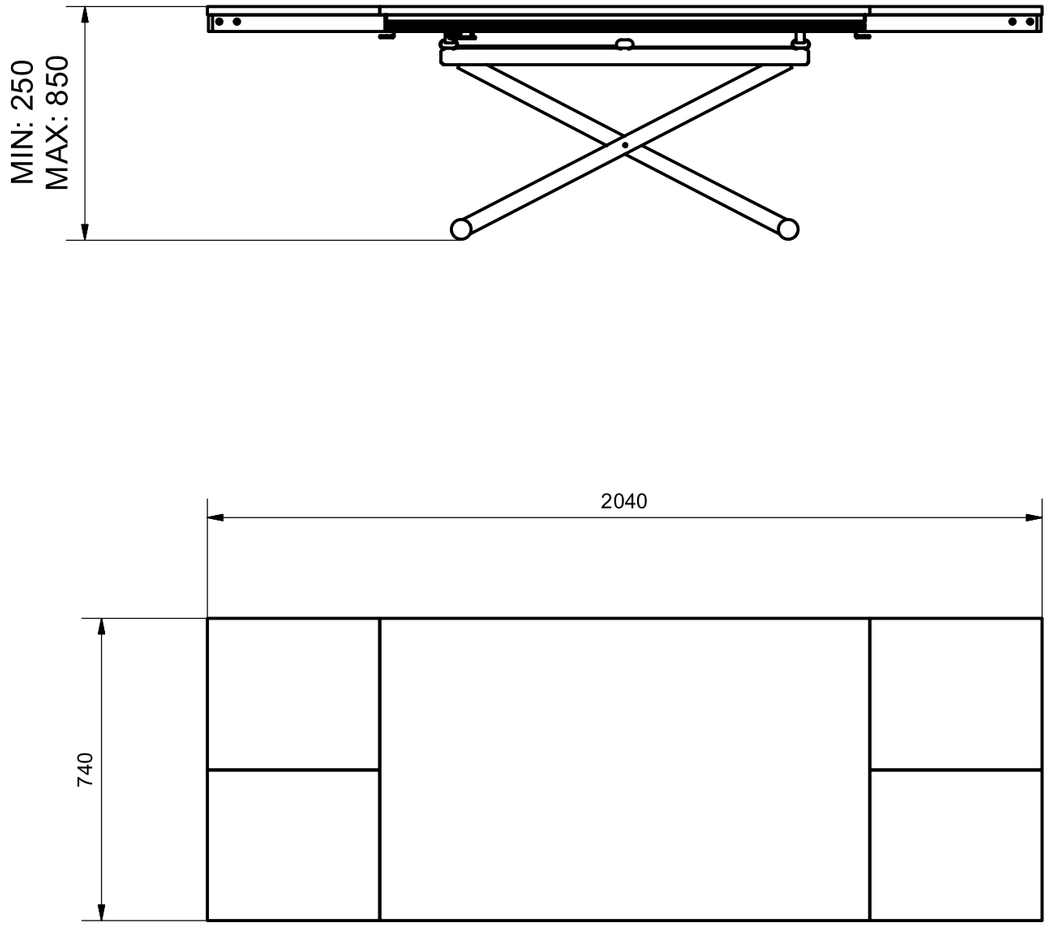
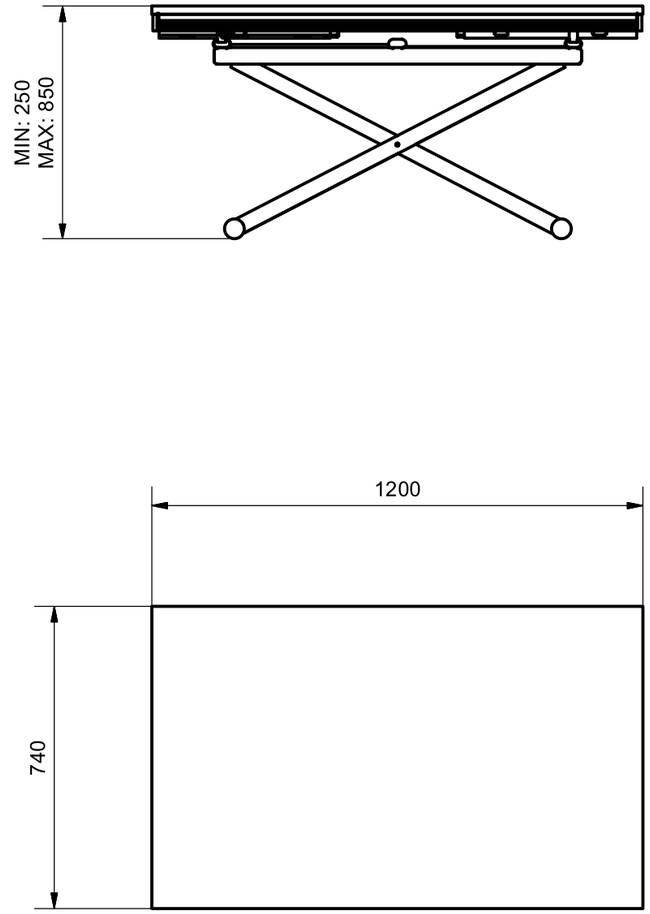
CLOSE