Sorry, this product is not available in your region. To find similar products available in your region, click here.

MODUL Hinge - 100°

Product # 90M255180

Door Position Overlay

Closing Mechanism Free Swing

Screw/Nail Not included

Packaging Specifications Not Applicable

Packaging format Per unit

DESCRIPTION

Proven over many years
MODUL has proven itself over many years with its combined sliding and plug-in technology. The functional hinge range is highly valued in furniture manufacturing.

One hinge, three good reasons
The short glide path makes it easy to mount the front on the furniture carcass and the three-dimensional adjustment ensures a balanced play pattern. The integrated safety catch ensures that the door stays in place during this time.

- Simple and efficient assembly thanks to short glide path
- Three-dimensional door adjustment
- Unhooking safety device

REQUIRED PRODUCTS

Requires the following products

		Sales unit
	Zinc-Plated Wood Screw, Flat Head, Square Drive, Coarse Thread, Regular Wood Point Product # FKCZ658PR	Box of 15000

Requires ONE of the following products

		Sales unit
	Two-Piece Wing Mounting Plate Product # 195H710180	
	OR	
	One-Piece Wing Mounting Plate Product # 193L610180	

TECHNICAL SPECIFICATIONS

Product #	90M255180
Use Type	Standard Door
Hinge Type	MODUL
Cabinet Thickness	Min. 5/8 in*
Door Thickness	5/8 in*
Material	Steel
Cabinet Type	Frameless
Fixing Type	Screw-On
Milling Diameter	1 3/8 in*
Milling Depth	13/32 in*
Hinge Opening Angle	+100°
Brand	Blum

Disclaimer

Measures shown with an asterisk (*) have been converted as per your preference. These are not the official measures. To view the measures specified by the manufacturer, click here.

IMPORTANT INFORMATION

The best way to clean your Blum fittings is as follows: - Use a soft, lint-free cloth, a chamois leather or a sponge - Ensure that the material you use to wipe the furniture with is just damp, not wet - Always wipe the furniture again afterwards with a dry cloth - If possible, use cleaning products intended specifically for materials such as leather, stainless steel etc.; otherwise, use only clean water - Wipe off dirt as soon as it appears AVOID THE FOLLOWING: - using steam cleaners - using cleaning products, such as abrasive cleaning powder, steel wool and scourers, as well as cleaning agents, such as acetone, chlorine, cellulose thinner and solutions whose names start with tri or tetra - storing open cleaning products, baking powder, dishwasher products or table salt, for example. Fumes can cause corrosion on all metal surfaces.

APPLICATION

- For the installation of a door on a piece of furniture and/or a cabinet. - Blum hinges are not made of stainless steel, therefore it is not recommended to use them for outdoor applications.
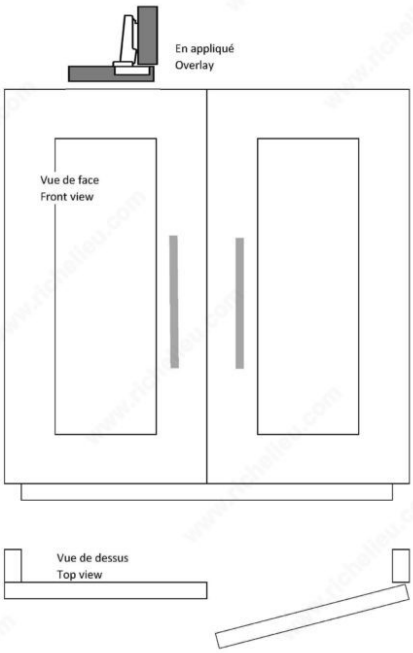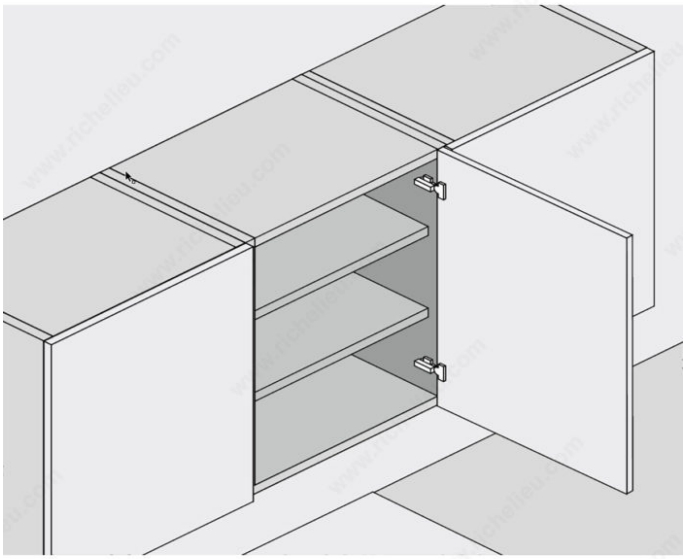
PRODUCT PHOTOS