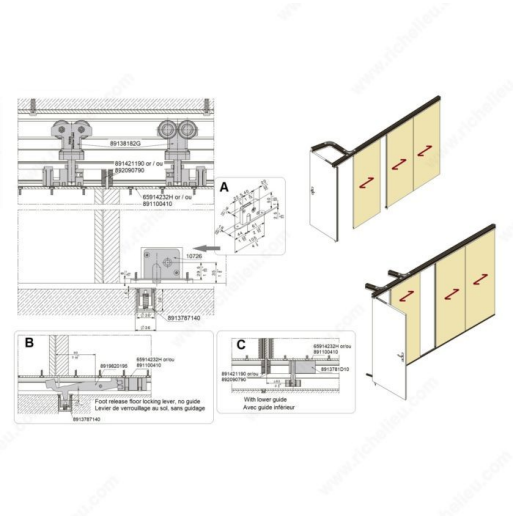

HAWA VARIOTEC 150H Sliding Door System for 1 Door, Without Guide

Product # WEBKIT1243952

DESCRIPTION

Simple adjustment

The HAWA VARIOTEC 150H Basic Sliding Door System Without Guide is a typical list of components for 1 sliding wood door for multi-door sliding partition system. Used for applications without a bottom guide channel. This is a top-hung sliding mechanism with ball bearing wheels stabilizing the door, for doors weighing up to 150 kg (330 lbs) each. Suspension profiles are rebated/mortised into the door to conceal hardware and allow for door adjustments. H-shape suspension profile works with press-fit brush seals to close gaps at the top of the door.

ADVANTAGES AND BENEFITS

Prepacked modular set for one sliding door

INCLUDED IN THIS WEBKIT

		Sales unit
	Brush Seal for Suspension Profile Product # 891379190	
	Multipurpose Suspension Profile Product # 65914232H	Length
	Fork Spanner Product # 89154592G	
	Hex Wrench, 5 mm (7/32") Product # 89171102G	

2-Wheeled Carriage
Product # 89138182G

Box

Cover for Suspension Profile
Product # 891421190

Floor Locking Lever
Product # 8919820195

Bag

REQUIRED PRODUCTS

Requires the following products

Sales unit

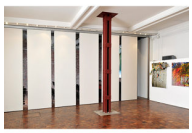

HAWA VARIOTEC 150H Multi-Door Sliding Partition System
Product # WEBKIT1243955

Overall Length: 15 ft 11 in*
Door Configurations: Perpendicular (90 degree) to upper track
Number of Doors: 5
Door Width: 38 1/4 to 38 1/4 in*

AND

HAWA VARIOTEC 150H Multi-Door Sliding Partition System
Product # WEBKIT1243958

Overall Length: 24 ft*
Door Configurations: Parallel to upper track
Number of Doors: 8
Door Width: 35 3/8 to 39 3/8 in*

TECHNICAL SPECIFICATIONS

Product #	WEBKIT1243952
Door Movement	Movable Wall
Detailed Door Movement	Single sliding
Door Position	Inset/Inlay
Roller Position	Upper
Door Installation	Top Hung
Compatible with	Hawa Variotec
Adjustable	Yes
Load Capacity	132 to 331 lb*
Roller Type	Ball Bearing
Product type	Hardware Set
Door Material	Wood
Number of Doors	1
Door Width	23 5/8 to 59 in*
Track Mounting	Ceiling Mount
Door Thickness	1 3/8 to 2 3/8 in*
Door Height	70 7/8 to 157 in*
Soft-Closing	No
Brand	Hawa
Application	Sliding Wall
Brand Model	Hawa Variotec

Disclaimer

Measures shown with an asterisk (*) have been converted as per your preference. These are not the official measures. To view the measures specified by the manufacturer, click here.

IMPORTANT INFORMATION

IMPORTANT: Measure in millimeters (mm) for best accuracy during assembly and installation - Please read the entirety of the installation manual before proceeding with installation. - Wear safety gear such as gloves, safety glasses, safety shoes and ear protection - Every fastener used to attach the track to the wall must be fastened securely into a structural surface. - Always remove debris/dust/residue (sawdust and/or aluminum) from all tracks and guide channels using a dry cloth during installation and before operating the system. - Never spray lubricant on this product. - Do not exceed stated limitations and parameters. This will cause early wear and performance failure.

DISCLAIMER

Pictures provided for visual reference only: actual product may vary. - All required hardware should be ordered and obtained prior to initiating fabrication or installation work. Please verify that the parts and quantities listed in your order are correct before proceeding to checkout. - Always use instructions provided by the manufacturer, as included with the product. Manufacturer reserves the right to amend, modify, or otherwise supplement any previously issued product and/or technical information, as deemed required from time to time, without prior notice. - The documentation, drawings, and instructions on this page apply to the system described on this page only. Richelieu expressly declines all responsibility for any design or construction that combines this system with systems from this same manufacturer or systems from other manufacturers. - Installation of the product shall be executed by qualified individuals only, always ensuring that each product is securely installed using proper fixation methods, as appropriate for each applicable substratum. We trust that anyone installing these products has the required skills, knowledge, and experience. Richelieu expressly disclaims any liabilities for results obtained through improper use or installation.
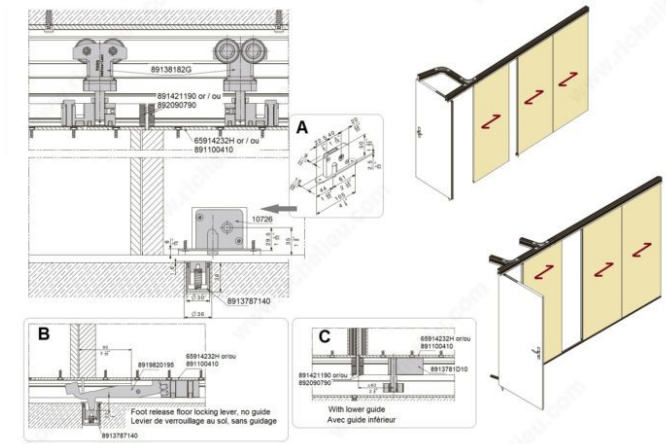
PRODUCT PHOTOS